VIRGO SOLAR

MAGNITECH
LIGHTING INDUSTRIES

All-in-One Solar Post Top



20W

2,000
lumens

MAGNITECH
LIGHTING INDUSTRIES

All-in-One
Solar Post Top

SABS ISO 9001

Independent by **Design.**

The Virgo Solar LED Post Top is a fully self-sustaining all-in-one solar lighting solution designed for locations where grid connection is unavailable, impractical or unnecessarily costly. Its integrated solar panel, lithium battery, LED engine and intelligent controls provide dependable off-grid illumination without trenching, cabling or connection to the electrical network.

Delivering 2,000 lumens from a 20W LED platform, Virgo combines autonomous operation with intelligent energy management. An integrated day/night sensor automatically manages dusk-to-dawn operation while an infra-red motion sensor increases output when activity is detected, conserving stored energy during quieter periods.

Its robust aluminium construction, IP65 protection and IK10 polycarbonate diffuser make it suitable for demanding outdoor environments. With more than 24 hours autonomy at full charge and backup capability for up to three rainy days, Virgo provides a practical, low-infrastructure solution for parking areas, estates, pathways, perimeter areas and public spaces.

Fit-For-Purpose:

- Open car parks
- Office parks
- Residential estates
- Security & perimeter lighting
- Public areas
- Walkways
- Parks
- Isolated off-grid areas



Dimensions

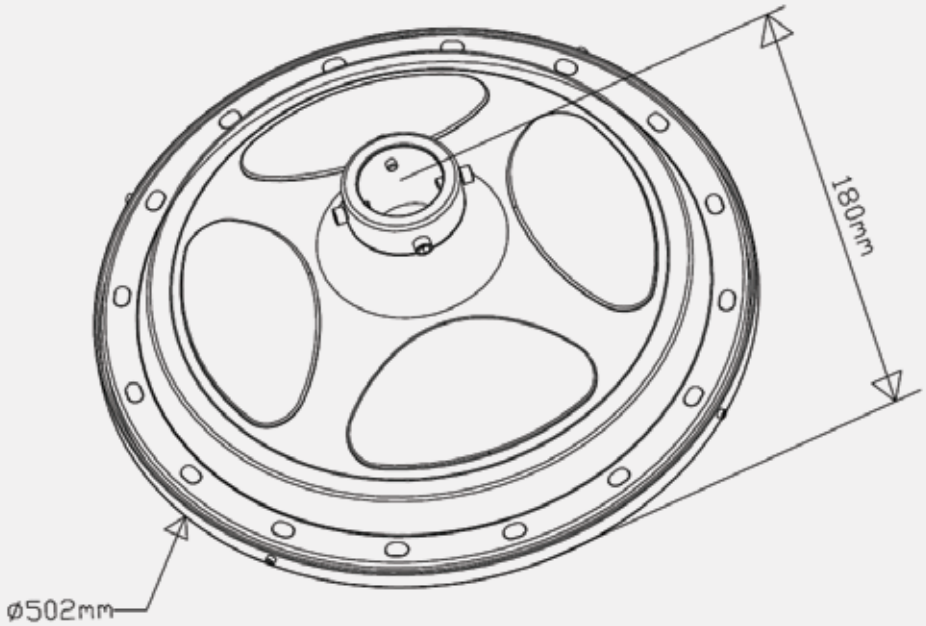

Typical Light Distributions

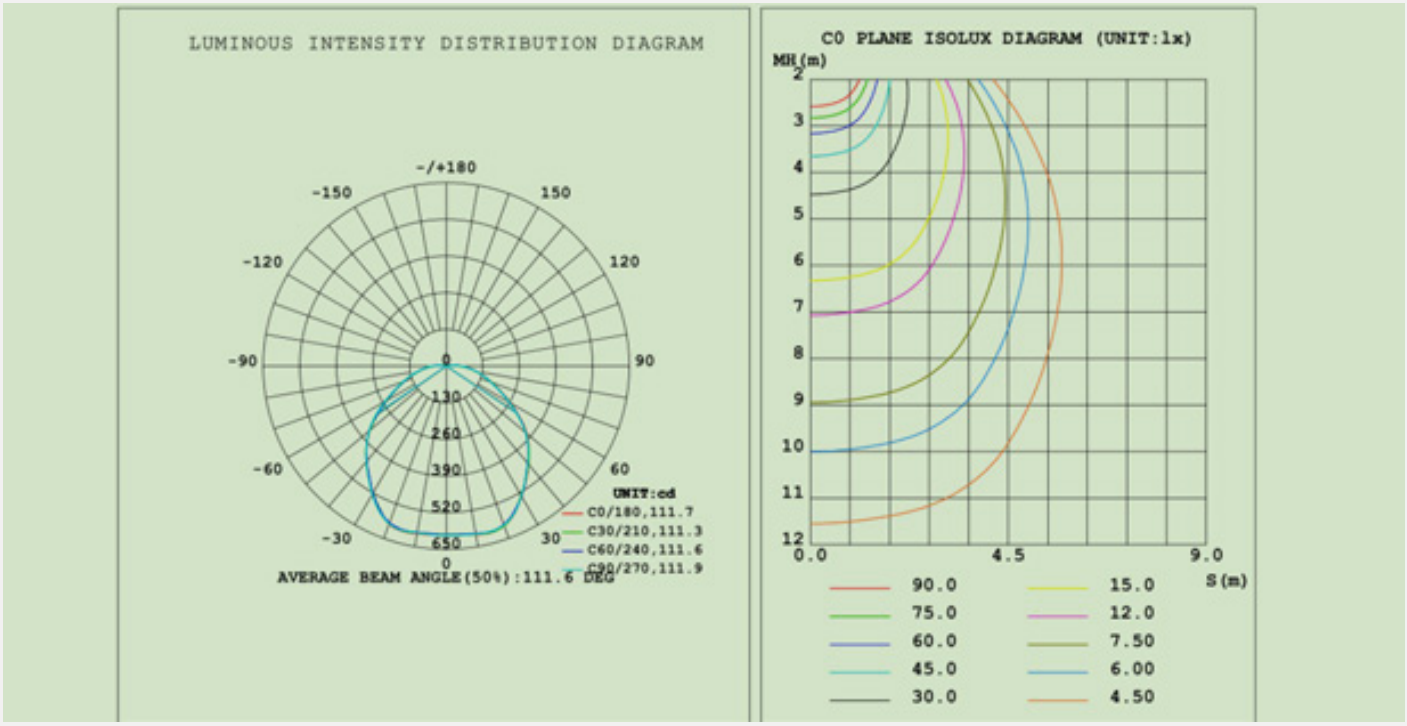

MAGNITECH
LIGHTING INDUSTRIES

Technical Specifications

SABS ISO 9001

FEATURE	20W
NOMINAL POWER	20 Watts
NOMINAL FLUX (LM)	2,000 Lumens
NOMINAL EFFECIENCY (LM/W)	100
RECOMMENDED MOUNTING HEIGHT	4–5 m
STORAGE CAPACITY	86.58 Wh
AUTONOMY	>24 hrs at full charge; up to 3 rainy days backup
CHARGING TIME	7–8 hrs
BATTERY CYCLE LIFE	>4,000 cycles @ 80% DoD
BATTERY DESIGN LIFE	>10 years
OPERATING TEMPERATURE	-10°C to +45°C
IP RATING	IP65
IK RATING	IK10
SOLAR PANEL	6W / 6V, 18% efficiency
DIFFUSER	Polycarbonate
HOUSING	Aluminium
MOTION SENSOR	Integrated infra-red
DAY/NIGHT SENSOR	Integrated
SOLAR COMPLIANCE	IEC 61215 / IEC 61730 I & II / IEC 60904

* Values shown are AFTER both Thermal and Optical losses. Output will vary depending on optics utilised. Performance values are subject to ±5% variance.

Due to continuing R&D, the above data may change without prior notice. Please consult us for the latest available options. Warranties subject to our standard terms and conditions of sale. Visit our website for our full product range - www.magnitech.co.za.

MAGNITECH - BENCHMARKING
THE STANDARD OF **QUALITY**

MAGNITECH
LIGHTING INDUSTRIES

MAGNITECH (PTY) LTD

21 RAEBOR ROAD, BENROSE, JOHANNESBURG, 2094
TEL: +27 11 618 2720 | **FAX:** +27 11 614 9603
EMAIL: SALES@MAGNITECH.CO.ZA

WWW.MAGNITECH.CO.ZA